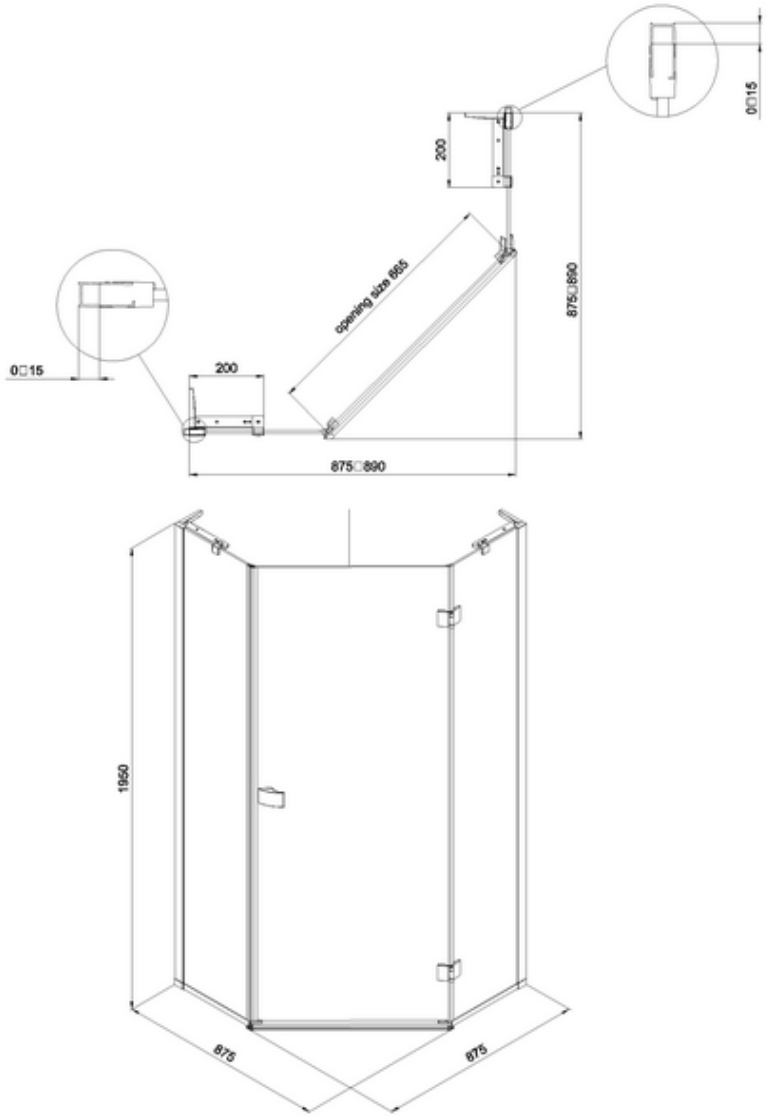
0□15
200
opening size 865
875□890
0□15
200
875□890
1950
875
875