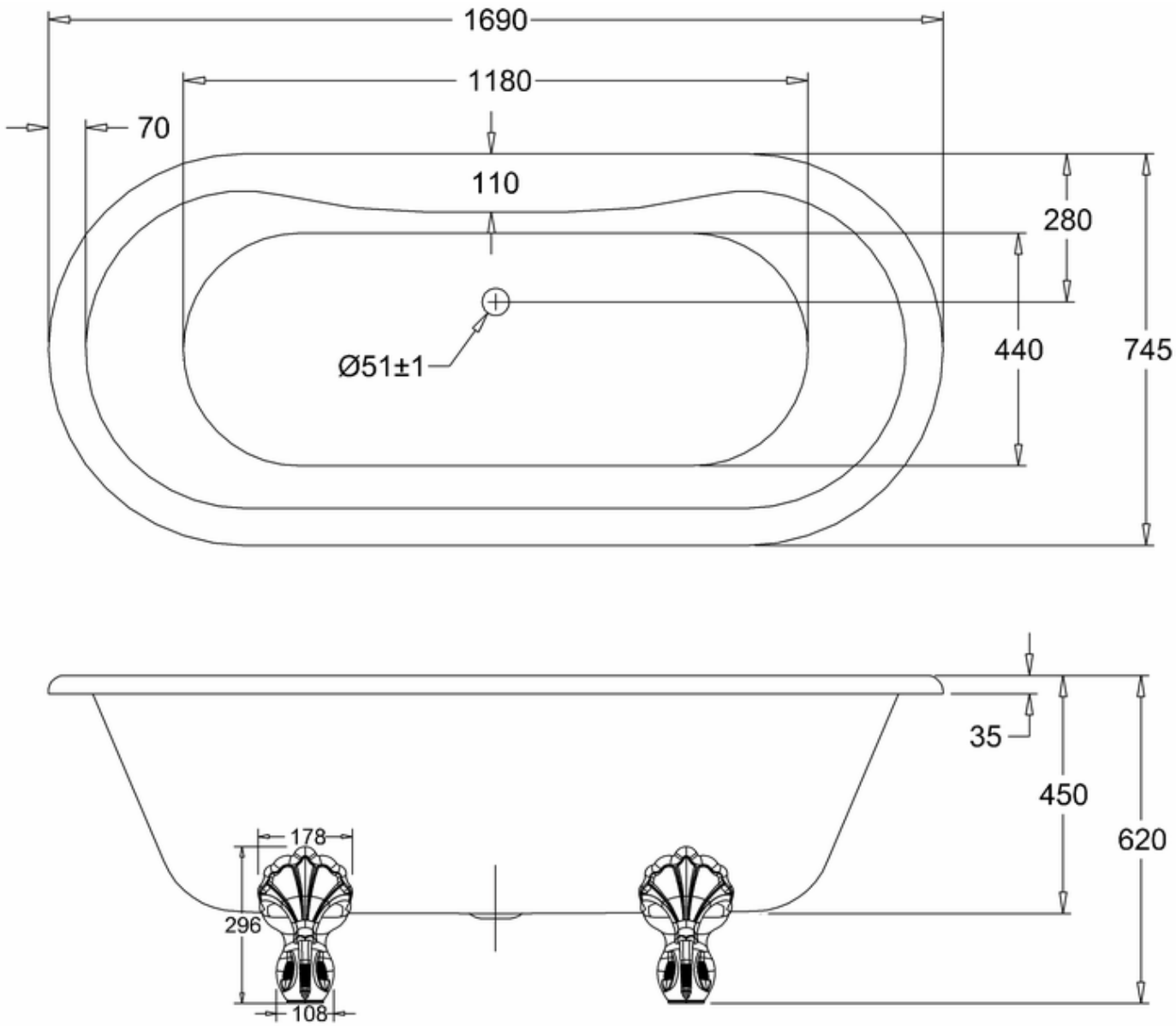

BATHROOMBRANDS®