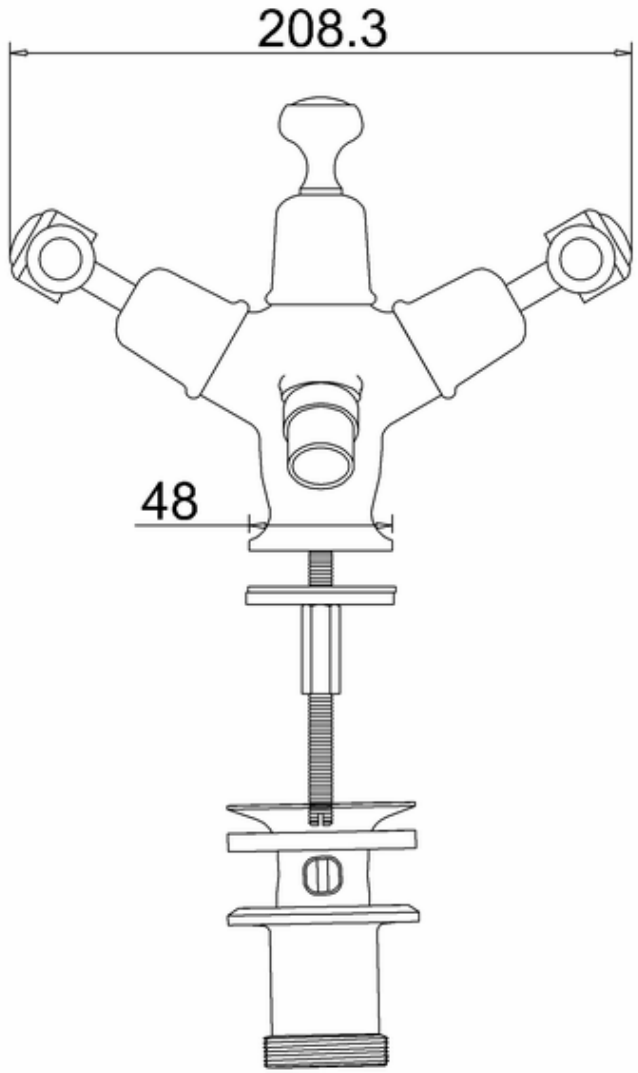
208.3
48

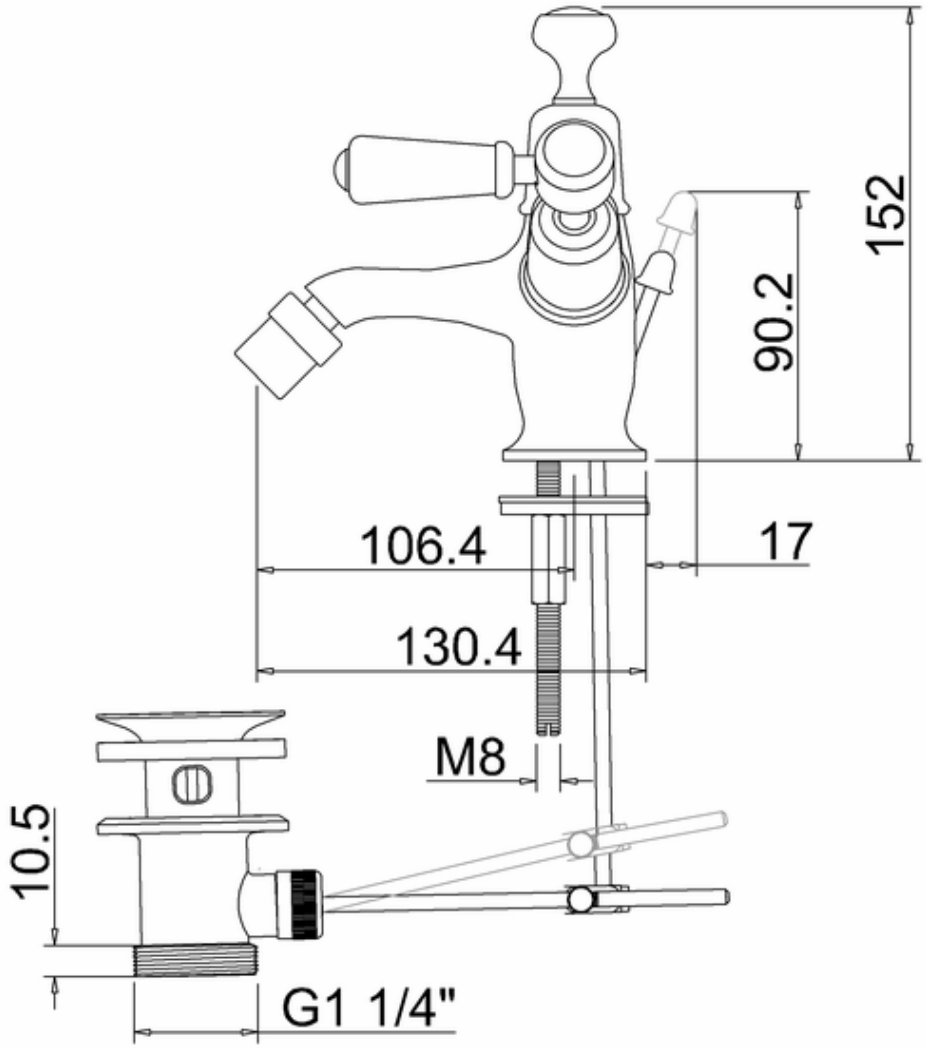
152
90.2
106.4
17
130.4
M8
10.5
G1 1/4"