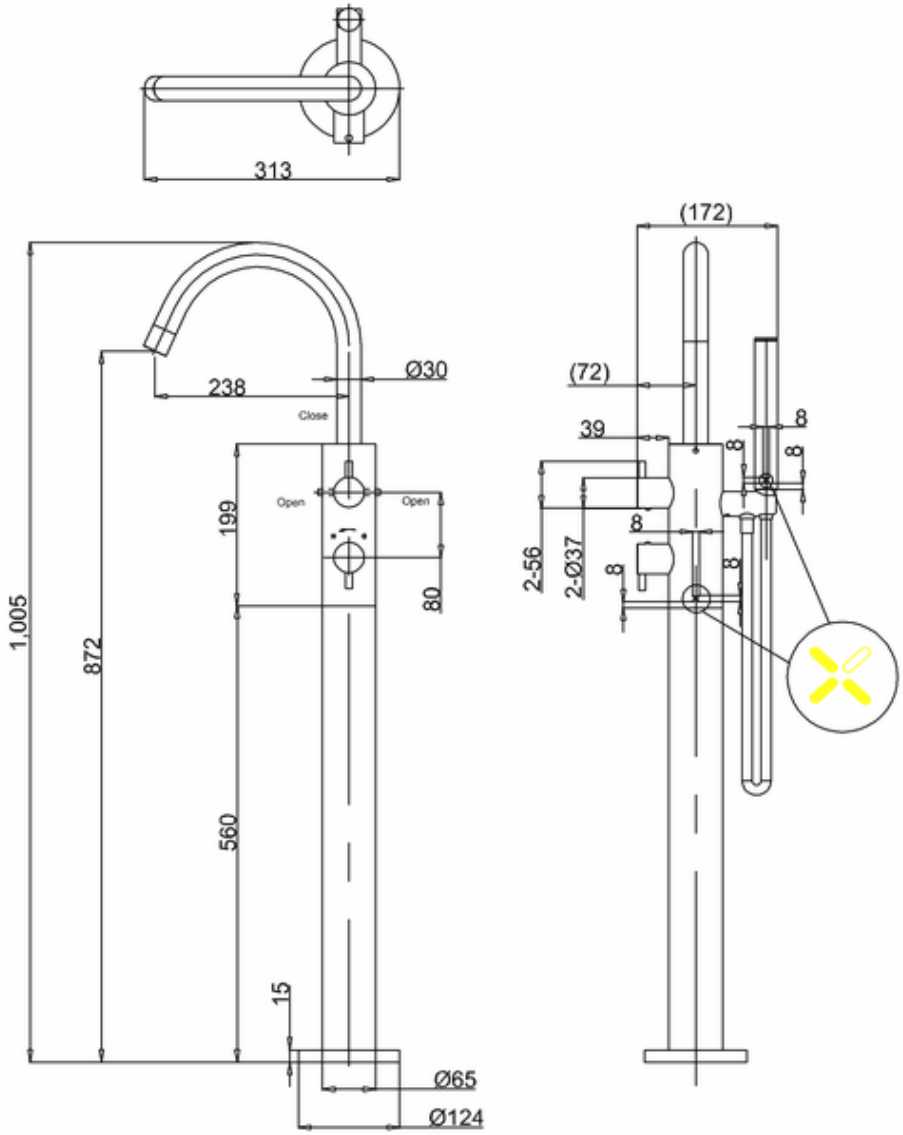
313
(172)
(72)
39
8
8
8
8
8
8
2-56
2-Ø37
238
Ø30
Close
Open
Open
199
80
1,005
872
560
15
Ø65
Ø124