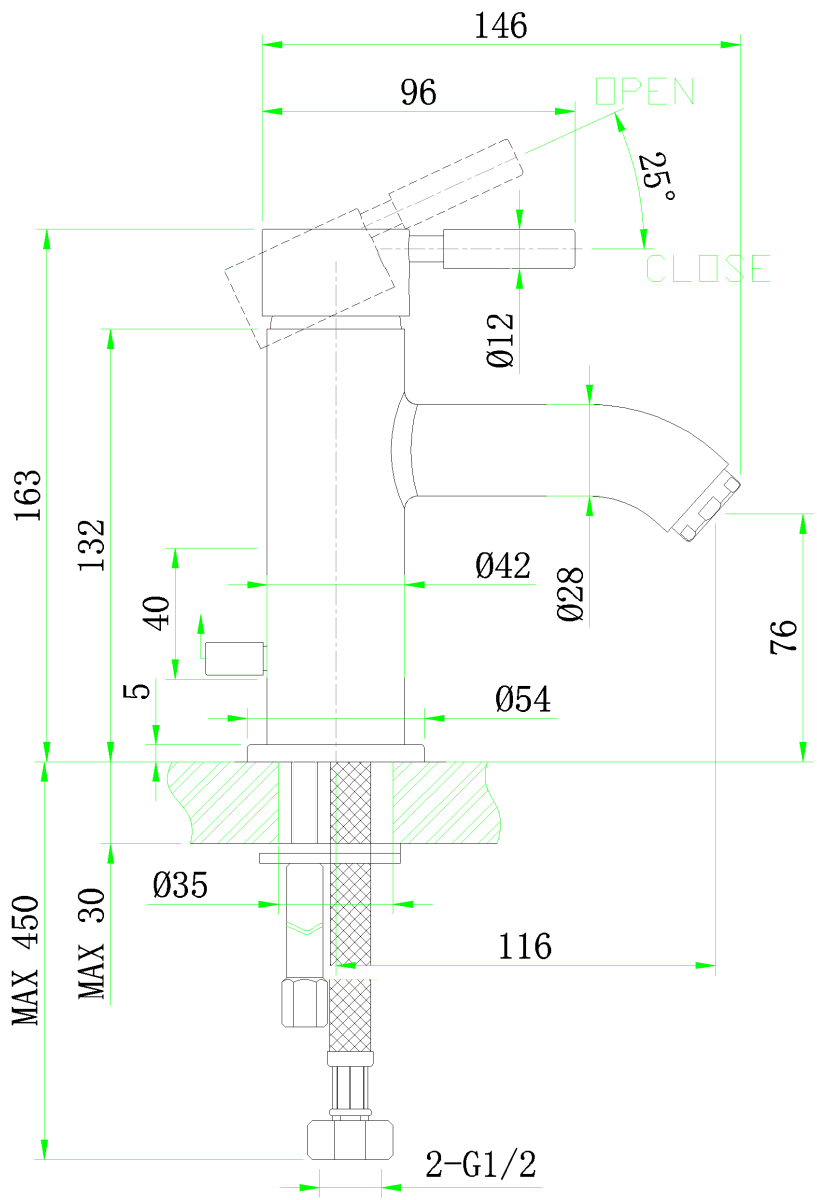

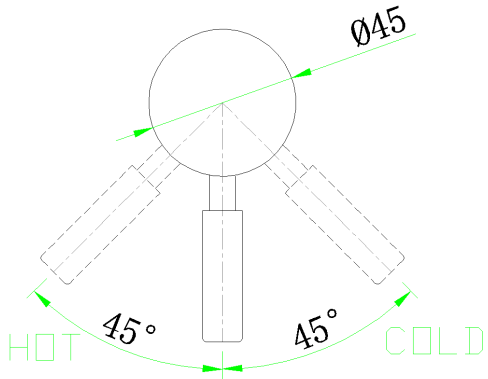

BATHROOMBRANDS®