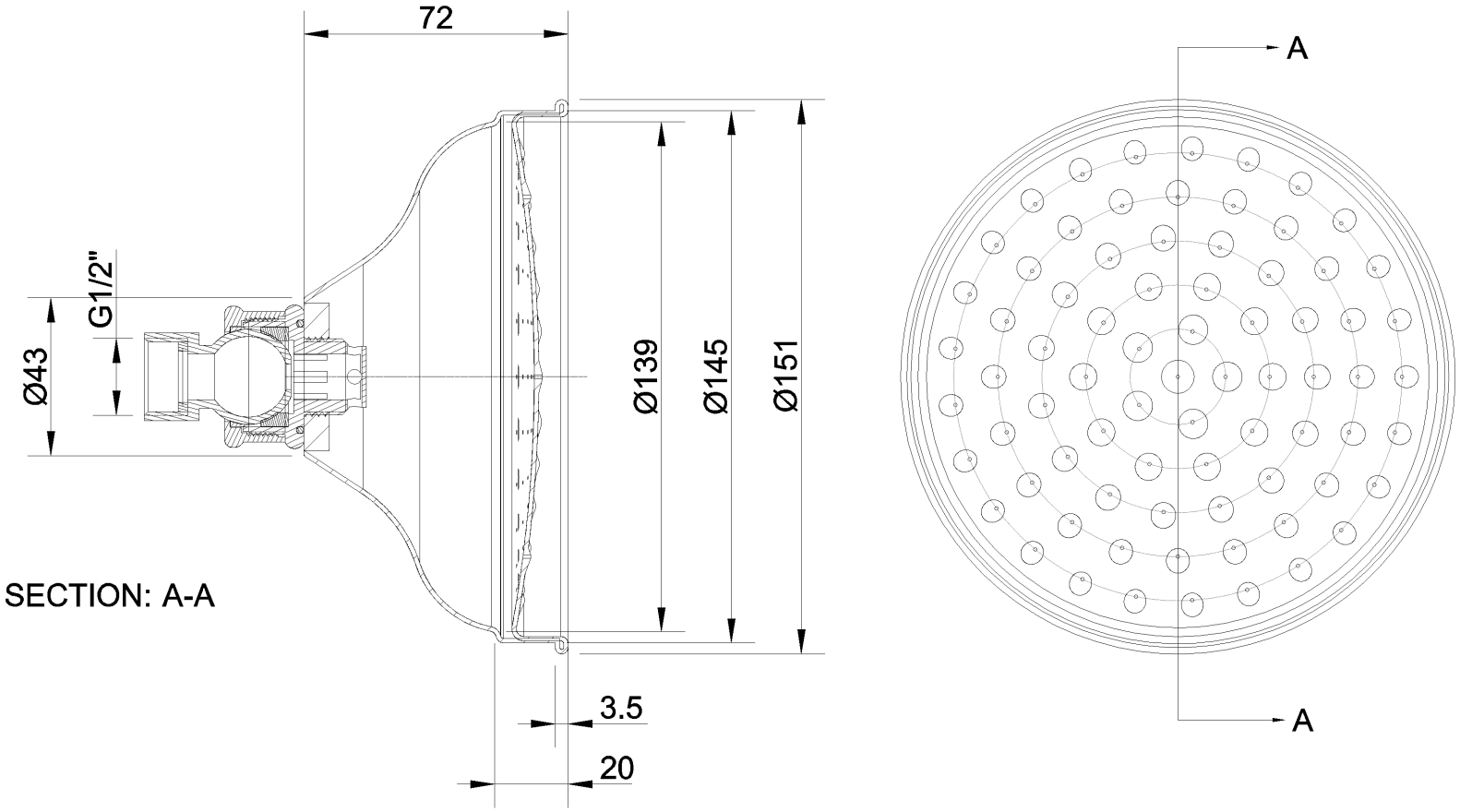

SECTION: A-A

BATHROOMBRANDS®