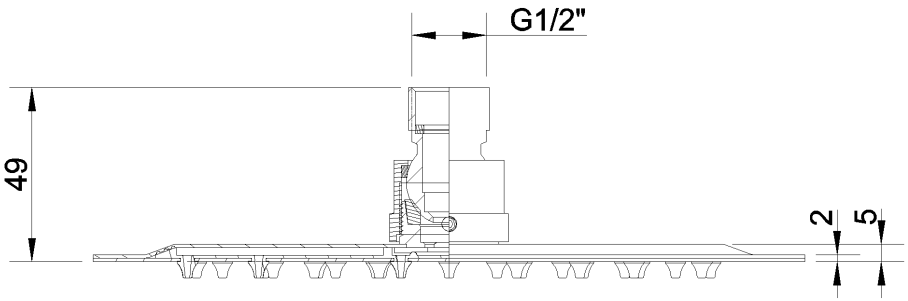
G1/2"
49
2
5

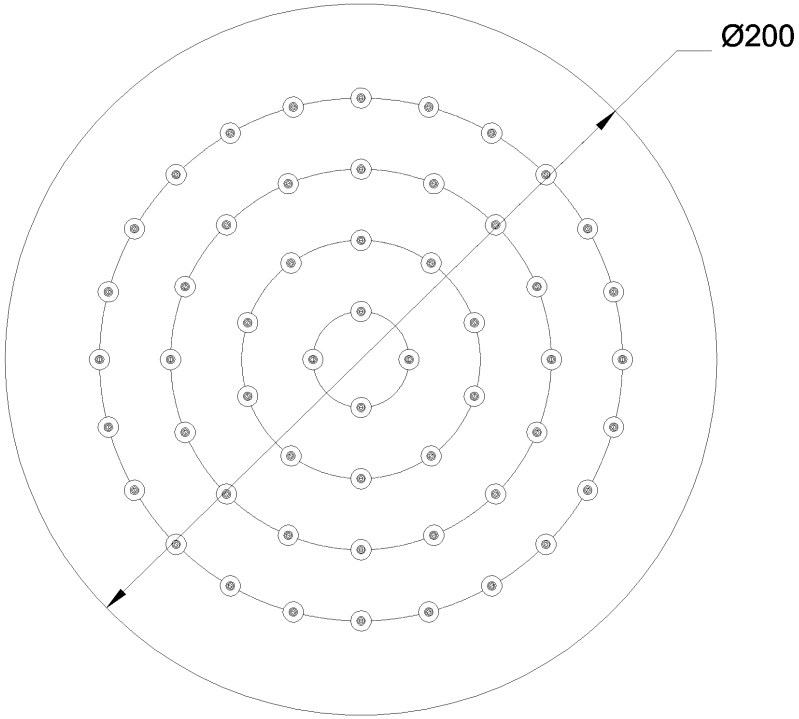
Ø200