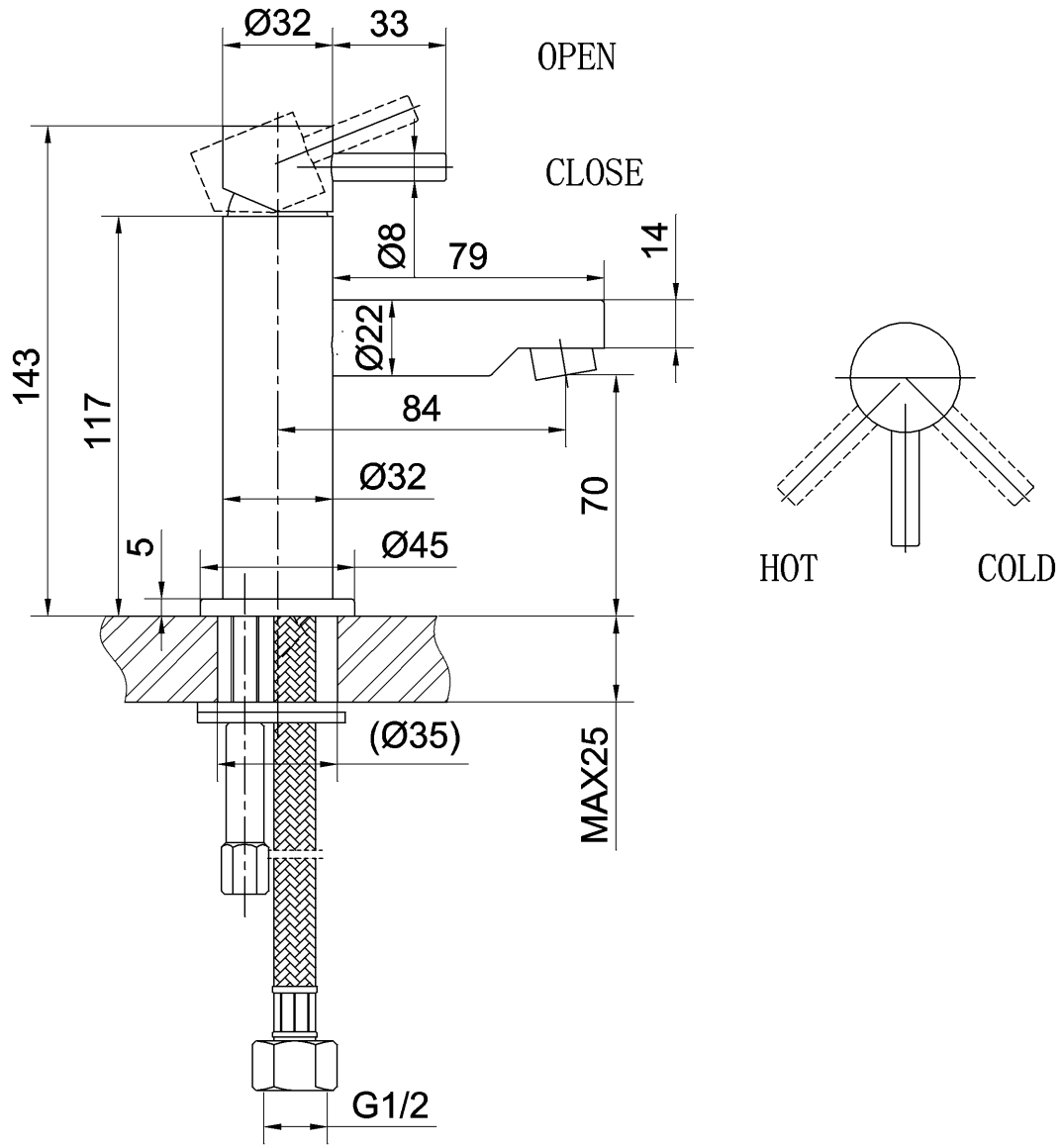
Ø32
33
OPEN
CLOSE
Ø8
79
14
Ø22
143
117
84
Ø32
70
5
Ø45
(Ø35)
MAX25
G1/2
HOT
COLD