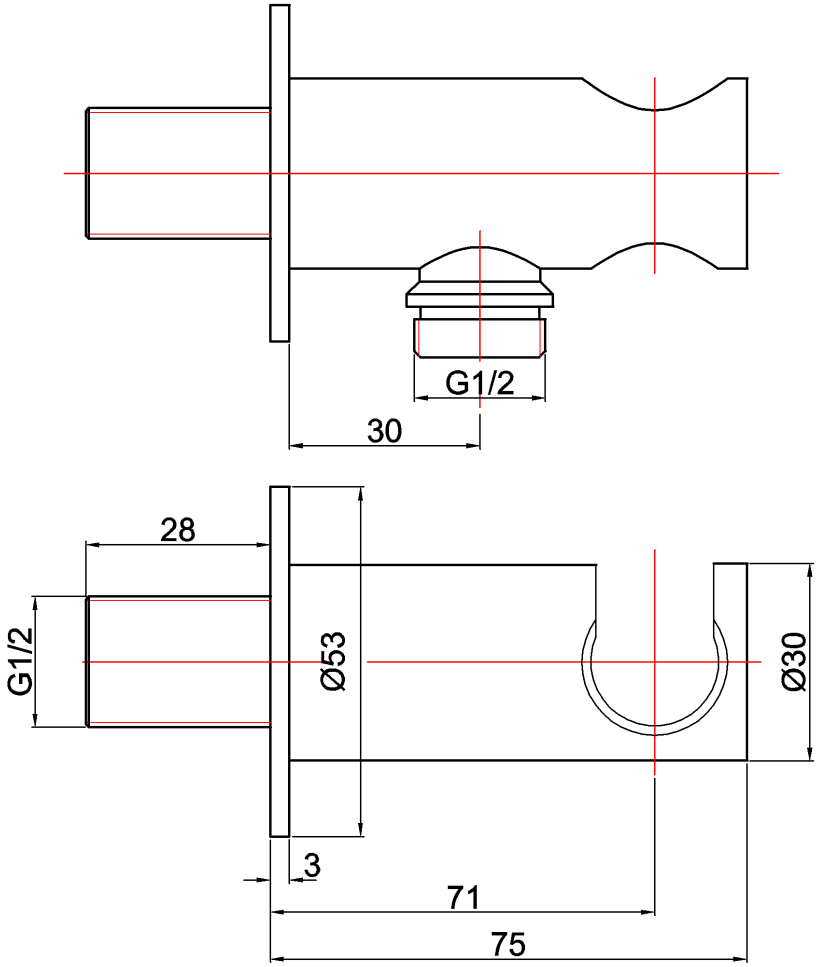
G1/2
30
28
G1/2
Ø53
Ø30
3
71
75